DC/DC Wide Input Converter
ECW 08-S Series

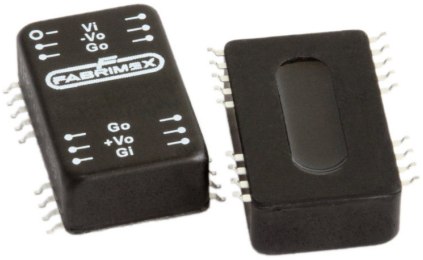

* I/O isolation of 1500 Vdc, ask factory for 3000 Vdc
* Pi-filter at input
* Continuous short circuit proof
* Efficiency up to 87%
* No derating up to 71°C
* Low output ripple and noise
* Metal case with non conductive base plate
* SMD mounting
* UL60950-1 recognized, H and V versions only
* Safety Meets IEC/EN/UL 62368-1

c UL us
E195564

Product Range

Model	Input		Iin @ Uin nom.		Output			Efficiency	Max.
	nominal	range	full load	no load	Uout	Iout max.	power	typ.	capacity
Single									
ECW12-0308SH-S	12Vdc	9...18Vdc	0.529A	25mA	3.3Vdc	1.5A	5W	78%	4'700uF
ECW12-0508SH-S	12Vdc	9...18Vdc	0.781A	25mA	5.0Vdc	1.5A	7.5W	80%	4'700uF
ECW12-1208SH-S	12Vdc	9...18Vdc	0.753A	25mA	12Vdc	0.625A	7.5W	83%	4'700uF
ECW12-1508SH-S	12Vdc	9...18Vdc	0.744A	25mA	15Vdc	0.5A	7.5W	82%	4'700uF
ECW24-0308SH-S	24Vdc	18...36Vdc	0.264A	20mA	3.3Vdc	1.5A	5W	78%	4'700uF
ECW24-0508SH-S	24Vdc	18...36Vdc	0.377A	20mA	5.0Vdc	1.5A	7.5W	83%	4'700uF
ECW24-1208SH-S	24Vdc	18...36Vdc	0.359A	20mA	12Vdc	0.625A	7.5W	87%	4'700uF
ECW24-1508SH-S	24Vdc	18...36Vdc	0.359A	20mA	15Vdc	0.5A	7.5W	87%	4'700uF
ECW48-0308SH-S	48Vdc	36...72Vdc	0.136A	10mA	3.3Vdc	1.5A	5W	76%	4'700uF
ECW48-0508SH-S	48Vdc	36...72Vdc	0.193A	10mA	5.0Vdc	1.5A	7.5W	81%	4'700uF
ECW48-1208SH-S	48Vdc	36...72Vdc	0.184A	10mA	12Vdc	0.625A	7.5W	85%	4'700uF
ECW48-1508SH-S	48Vdc	36...72Vdc	0.182A	10mA	15Vdc	0.5A	7.5W	86%	4'700uF

Dual

ECW12-0508DH-S	12Vdc	9...18Vdc	0.772A	30mA	+5.0VDC -5.0VDC	+0.75A -0.75A	3.75W 3.75W	81%	2'200uF 2'200uF
ECW12-1208DH-S	12Vdc	9...18Vdc	0.753A	30mA	+12Vdc -12Vdc	+0.31A -0.31A	3.75W 3.75W	83%	2'200uF 2'200uF
ECW12-1508DH-S	12Vdc	9...18Vdc	0.753A	30mA	+15Vdc -15Vdc	+0.25A -0.25A	3.75W 3.75W	83%	2'200uF 2'200uF
ECW24-0508DH-S	24Vdc	18...36Vdc	0.372A	25mA	+5.0VDC -5.0VDC	+0.75A -0.75A	3.75W 3.75W	84%	2'200uF 2'200uF
ECW24-1208DH-S	24Vdc	18...36Vdc	0.356A	25mA	+12Vdc -12Vdc	+0.31A -0.31A	3.75W 3.75W	87%	2'200uF 2'200uF
ECW24-1508DH-S	24Vdc	18...36Vdc	0.356A	25mA	+15Vdc -15Vdc	+0.25A -0.25A	3.75W 3.75W	87%	2'200uF 2'200uF
ECW48-0508DH-S	48Vdc	36...72Vdc	0.191A	15mA	+5.0VDC -5.0VDC	+0.75A -0.75A	3.75W 3.75W	82%	2'200uF 2'200uF
ECW48-1208DH-S	48Vdc	36...72Vdc	0.183A	15mA	+12Vdc -12Vdc	+0.31A -0.31A	3.75W 3.75W	85%	2'200uF 2'200uF
ECW48-1508DH-S	48Vdc	36...72Vdc	0.183A	15mA	+15Vdc -15Vdc	+0.25A -0.25A	3.75W 3.75W	85%	2'200uF 2'200uF

Notes:

Maximum case temperature under any operating condition should not be exceeded 100℃

Nomenclature

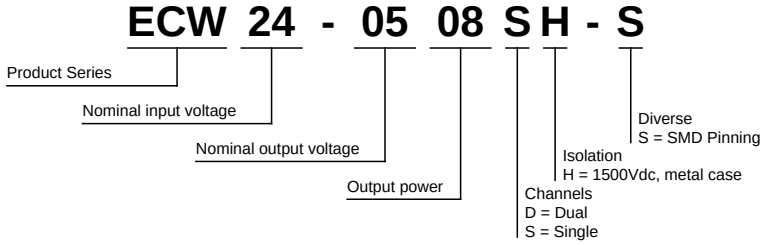

Specifications

All values refer to an ambient temperature of 25°C and nominal rated values where nothing else is specified.

Input Specifications

Characteristic		Conditions	min	typ	max	unit
U_{IN}	Input voltage		See	product	range	Vdc
U_{UVLO}	Under voltage lockout					Vdc
	Max. input current at full load		See	product	range	A
	No load input current		See	product	range	mA
	Inrush current					A^2s
	Input surge voltage					Vdc

Output Specifications

Characteristic		Conditions	min	typ	max	unit
U_{ACC}	Output voltage accuracy			±2		%
	Output voltage adjust					%
	Line regulation			±0.2		%
	Load regulation	25% / 100% step load change		s: ±0.5, d: ±1		%
	Cross regulation					%

	Load transient recovery time	25% / 100% step load change				us
	Load transient error band					%
	Temperature coefficient			±0.05		%/K
	Ramp up time					ms
	Start up time			3.3V/5V: 5, others: 20		ms
	Ripple and noise	BW = 20MHz		100		mVpp
	Current limit					% Inom
	Over voltage protection					% Unom
	Short circuit protection					% Inom
	Short circuit characteristic			continuous		

General Specifications

Characteristic		Conditions	min	typ	max	unit
U_{ISO}	Isolation voltage			1500		Vdc
R_{ISO}	Isolation resistance			1G		Ohm
C_{ISO}	Isolation capacity			560		pF
F_{SW}	Switching frequency			300		kHz
	Approvals			UL60950-1 recognized, H and V versions		
	Safety Approvals					
	MTBF			>1'800k		h
	Case material			Copper, black coated		
	Compound material			UL94V-0		
	PCB material			UL94V-0		
	Weight			18.5		gr
	Dimensions			31.8 x 20.3 x 10.2 (SMD) 11.4		mm
	Soldering infos			275°C for 10		s

EMC Specifications

Characteristic		Conditions	
	EMC conducted	See EMC information	EN55022/11 Class A

Environmental Specifications

Characteristic		Conditions	min	typ	max	unit
T_{AMB}	Operation temperature	Derating above 71°C		-25...+85		°C
T_{AMB}	Storage temperature			-40...+100		°C
T_{SD}	Thermal shutdown range					°C

EMC information

No EMC graph available yet, please contact factory

No EMC filter available yet, please contact factory

Derating

The operating case temperature range of ECW 08-S series is -25...+85°C. When operating the ECW 08-S series, proper derating or cooling is needed. The following curves are the derating curves of ECW 08-S. Please note that these are relative values in a test environment. Ambient temperature can not be exactly defined in an application, only the case temperature.Please ask the factory for a suitable heat sink.

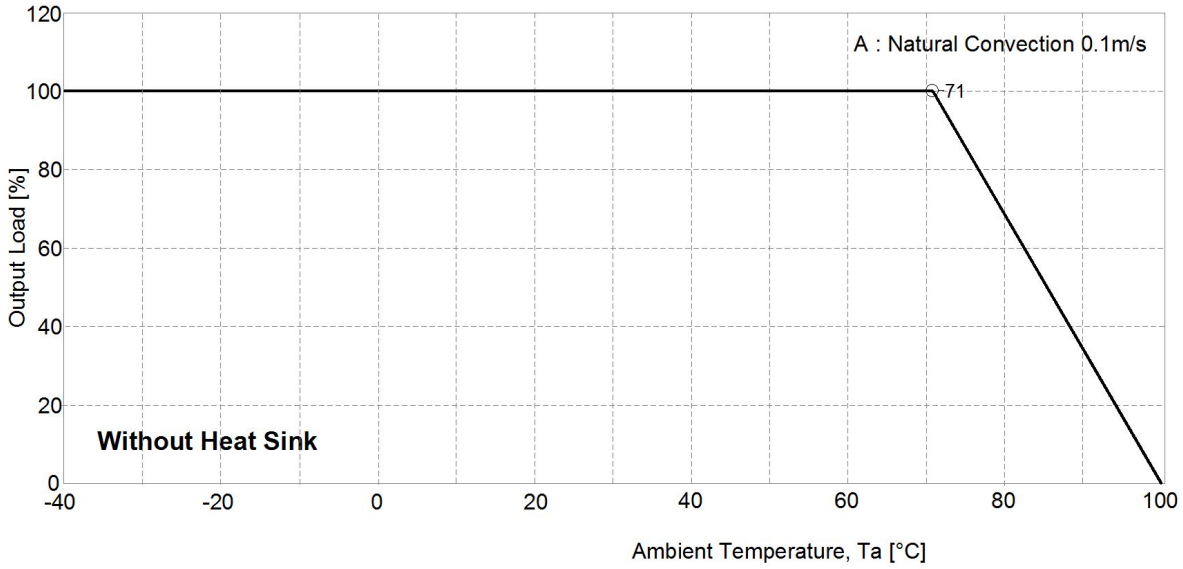

Own notes

Case

Normal tolerance 1/10 ±0.5 mm, 1/100 ±0.25 mm; Pin tolerance ±0.05 mm diameter
NP = No pin, NC = Not connected, NA = Not available for electrical contact, do not connect, (opt) = optional

DIL24 1.5/3kV AS4/AS5

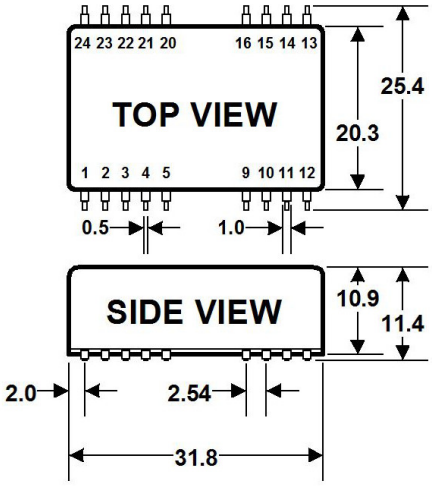

Pin	Single	Dual	Pin
1	NC	NC	1
2	-Vin	-Vin	2
3	-Vin	-Vin	3
4	NC	NC	4
5	NC / Rem	NC / Rem	5
9	NC	Common	9
10	NC	NC	10
11	NC	-Vout	11
12	NC	NC	12
13	NC	NC	13
14	+Vout	+Vout	14
15	NC	NC	15
16	-Vout	Common	16
20	NC	NC	20
21	NC	NC	21
22	+Vin	+Vin	22
23	+Vin	+Vin	23
24	NC	NC	24

Soldering

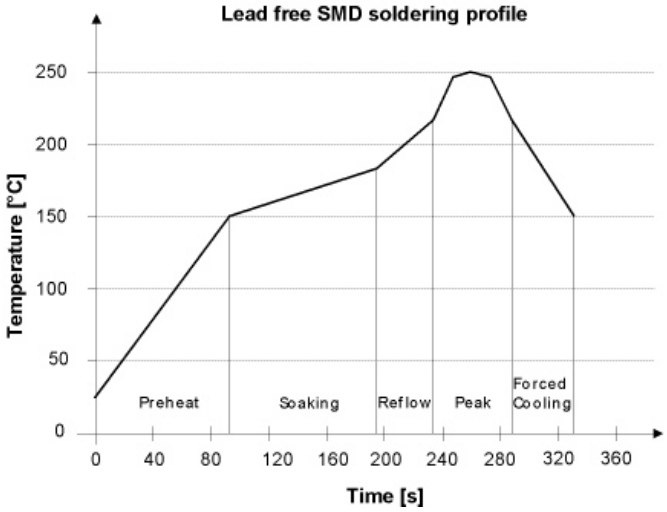

1. Soldering Materials: SHENMAO PF610-P(Sn/Ag/Cu)
2. Preheat: 1.6 °C/s (From 30°C to 150°C)
3. Soaking: 0.32 °C/s (From 150°C to 180°C)
4. Reflow: 1.0°C/s (From 220°C to 250°C)
5. Peak temperature: 260°C, above 220°C 40 to 60s
6. Forced cooling: -1.67 °C/s (From 220°C to 150°C)

Cleaning

The modules are cleanable with the today's known and in the electronics industry usually used products. Due to the different cleaning processes and new available products, we highly recommend to do a compatibility test when using the converters the first time.

Own notes

Notice: All statements, technical information, and recommendations related to FABRIMEX's products are based on information believed to be reliable, but the accuracy or completeness thereof is not guaranteed. Before utlizing the product, the user should determine the suitability of the product for its intended use.

Switzerland:
Exista AG - Mettlenbachstrasse 23
CH-8617 Mönchaltorf
Tel: +41 55 253 31 90
www.fabrimex.com / www.exista.ch
info@fabrimex.ch

International:
Please see our distributors
www.fabrimex.com/contact/distribution.html